Frequency crossover for PAS-212 MK4

Art. No.: E6511934
GTIN: 4026397740448

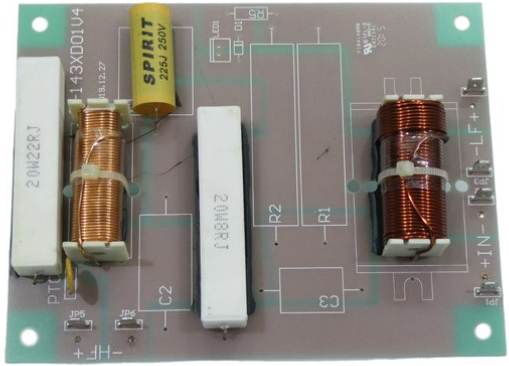

List price: 28.51 €

incl. 19% VAT.

All rights reserved. Subject to change without notice. Errors and omissions excepted.
Illustration only. Actual item may differ from photo.

Frequency crossover for PAS-212 MK4

Art. No.: E6511934
GTIN: 4026397740448

Features:

All rights reserved. Subject to change without notice. Errors and omissions excepted.
Illustration only. Actual item may differ from photo.